Lu120
Lu125

1.3 Megapixel USB 2.0 Camera

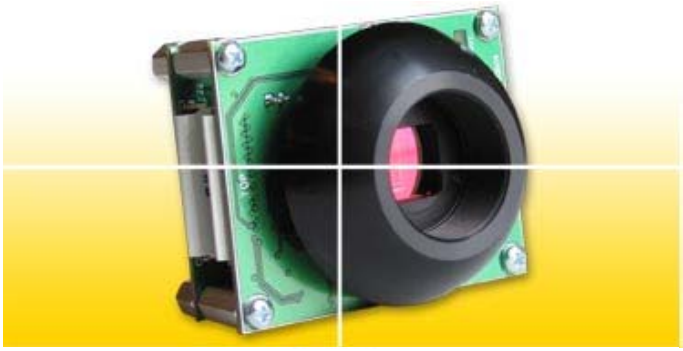

Outline

Lumenera's Lu120 series of megapixel cameras are designed to be used in a wide variety of applications. Both color and monochrome product models are available.

With 1280x1024 resolution and on-board processing these cameras deliver great image quality and value for industrial and scientific imaging applications.

Electronic global shutter provides capabilities similar to a mechanical shutter, allowing simultaneous integration of the entire pixel array, and then stopping exposure while image data is read out. They are ideal for capturing objects in high-speed motion.

Uncompressed images in live streaming video and still image capture are provided across a USB 2.0 digital interface. No framegrabber is required. Advanced camera control is available through a complete Software Developer's Kit (SDK), with sample code available to quickly integrate camera functions into OEM applications.

Hardware and software based synchronization trigger is provided standard. Lu120 model cameras are offered in both enclosed and board-level form. Custom form factor (sizes) can be provided.

All Lumenera products are supported by an experienced team of software developers and application engineers. We understand your imaging needs and are here to help you with your integration and development.

Performance Features

- **High dynamic range sensor using multi-slope integration**
- **Color or monochrome, progressive scan, 1.3 megapixel sensor**
- **High-speed USB 2.0 (480Mbits/sec)**
- **15 fps at full 1280x1024 resolution**
  30 fps 640x480
- **Higher frame rate at lower resolution with full sub-window control**
- **Global and rolling electronic shutter**
- **GPI/Os for control of peripherals and synchronization of lighting (4in/4out)**
- **FCC Class B, CE Ready**
- **RGB Bayer video output**
- **Select 8 or 10-bit pixel data**
- **Simplified cabling - video, power and full camera control over a single USB cable**
- **C-Mount provided**
- **DirectShow compatible USB cameras are software compatible with Windows XP and Vista 32 and 64-bit operating systems**
- **Complete SDK available**
- **One (1) year warranty**

Lumenera Corporation • 7 Capella Court, Ottawa, ON, Canada K2E 8A7 • (t) 1.613.736.4077 • (f) 1.613.736.4071 • www.lumenera.com

©2005-2010 Lumenera Corporation, all rights reserved.
Design, features, and specifications are subject to change without notice.
04152010

Specifications Lu120/Lu125

Image Sensor	**2/3" format, color or mono, 8.6mm x 6.9mm array**
Effective Pixels	**1280 x 1024, 6.7um square pixels**
Frame Rate	**15 fps at 1280x1024, 60fps at 640x480**
Sensitivity	**Moderate**
Dynamic Range	**56dB Rolling Shutter**
	52dB Global Shutter
	~100dB in multi-slope integration mode
White Balance	**Auto / Manual**
Dimensions (W x H x D)	**2.00 x 2.50 x 1.63 inches (board level)**
	2.25 x 3.85 x 1.56 inches (enclosed)
Mass	**~150g / 300g with enclosure**
Power Requirement	**USB bus power, or external 6VDC, 500mA**
Power Consumption	**~2.5 Watts**
Operating Temperature	**0°C to +50°C**
Operating Humidity	**0% - 95%, Non-condensing**
Interface Connector	**Standard USB**
Lens Mount (Lens not included)	**C-Mount (CS-Mount option)**

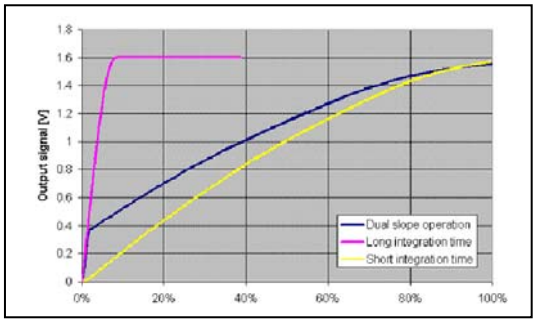

Dual Slope Integration Mode

On chip method of extending the dynamic range by integrating a long and short frame exposure into one still image. Short-integration controls overexposure of bright conditions, while long-integration supports exposure of low-light conditions. The resulting electro-optic curve is shown in the graph here.

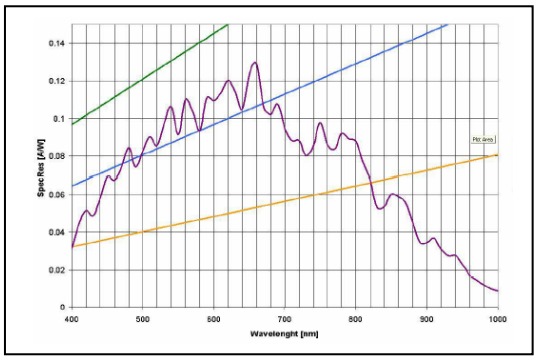

Monochrome Response

Ordering Information

Lu120MB	– 1.3 MP Monochrome USB 2.0 Camera Module
Lu120CB	– 1.3 MP Color USB 2.0 Camera Module
Lu125MB	– 1.3 MP Enclosed Monochrome USB 2.0 Camera
Lu125CB	– 1.3 MP Color USB 2.0 Camera Module
LuSDK	– Software Developer's Kit

Lumenera Corporation • 7 Capella Court, Ottawa, ON, Canada K2E 8A7 • (t) 1.613.736.4077 • (f) 1.613.736.4071 • www.lumenera.com

©2005-2010 Lumenera Corporation, all rights reserved.
Design, features, and specifications are subject to change without notice.
04152010

OEM Board-Level Camera

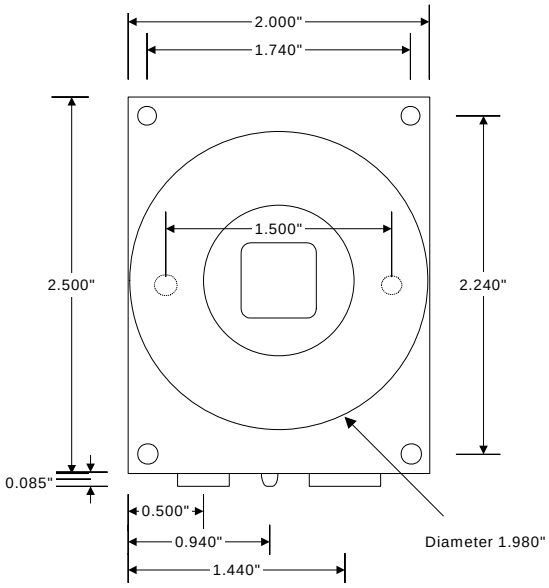

Front

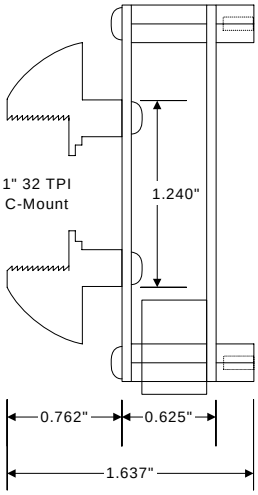

Side

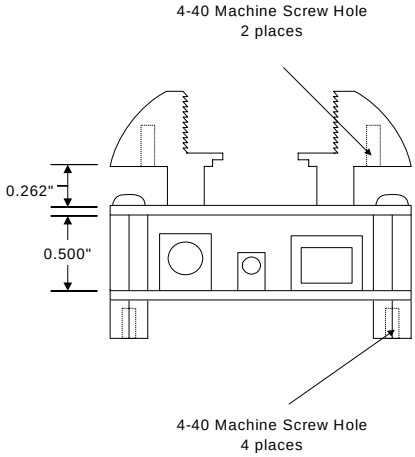

Bottom

Enclosed Camera

Back

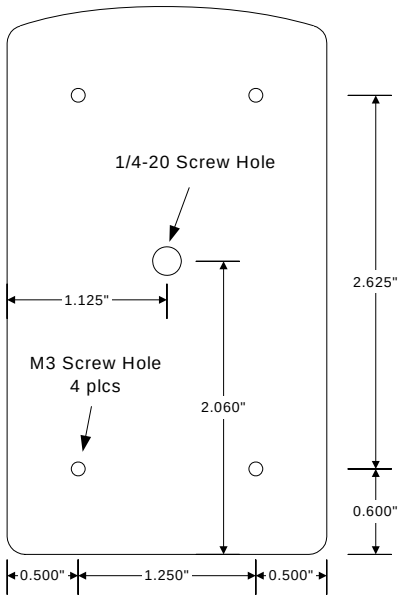

Side

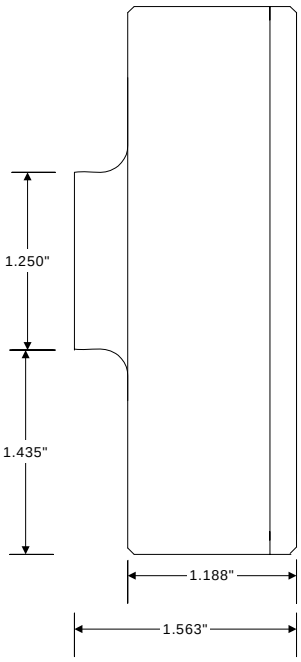

Front

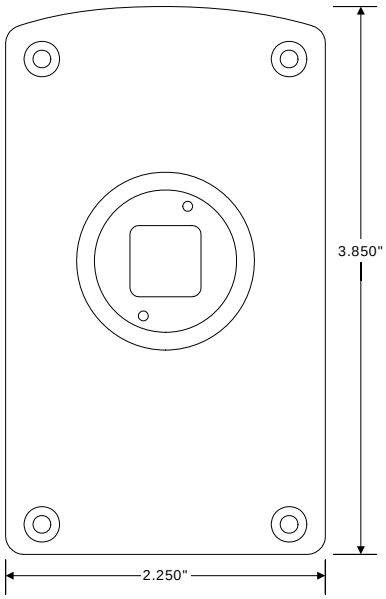

Bottom

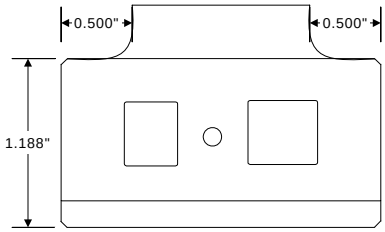

Lumenera Corporation • 7 Capella Court, Ottawa, ON, Canada K2E 8A7 • (t) 1.613.736.4077 • (f) 1.613.736.4071 • www.lumenera.com

©2005-2010 Lumenera Corporation, all rights reserved.
Design, features, and specifications are subject to change without notice.
04152010